Replacement Parts List for Heater Model B50D

ROUND SHELL M29870-146 REV H

KEY NO.	PART NUMBER	PART DESCRIPTION	QTY
1	M51104-01	Handle	1
2	M50901-01AB	Upper Shell	1
3	M50589-01	Handle Screw	2
4	M11084-27	Hex head screw #10-16 x 1/2	6
5	M50785-04	Assembly Combustion Chamber	1
6	M10908-2	Hex head screw #6-32 x 3/8	2
7	M16660	Photocell bracket	1
8	M16656-4	Photocell assembly	1
9	**	Burner head assembly	1
9-1	M50597	Nozzle	1
9-2	M16741-18	Retainer ring	1
9-3	M29835-2	Spark plug	1
9-4	M29805	Nozzle adapter	1
9-5	M29615-01	Bracket	1
9-6	M29824	Nut, 14mm	1
10	M11084-26	Hex head screw #10-16 x 3/8	2
11	M30884	Fan	1
12	**	Motor and pump assembly	1
12-1	M50843-01	Motor	1
12-2	M8645	Pump body	1
12-3	M22009	Insert	1
12-4	M22456-1	Rotor	1
12-5	M29608	End pump cover	1
12-6	M29632	Lint filter	1
12-7	M29633	Intake filter	1
12-8	M29609	End cover filter	1
12-9	M12461-31	Screw #10-32 x 1	3
12-10	M27694	Adjusting screw	1
12-11	M10993-1	Pressure relief spring	1
12-12	M22997	Plug	1
12-13	M8940	Steel ball 1/4" dia.	1
12-14	M29612-01	Output filter	1
12-15	M12461-31	Screw #10-32 x 1	6
12-16	M50016	Elbow 90°	1
12-17	M8643	Blade	4
12-18	FHPF3-4C	Screw #10-32 x 1/2	2

KEY NO.	PART NUMBER	PART DESCRIPTION	QTY
13	M51105-01	Fan guard	1
14	M10813-81	Power cord	1
15	M11143-1	Strain relief bushing	2
16	NTC-4C	Hex lock nut	2
17	M11084-26	Hex head screw #10-16 x 3/8	2
18	M50631	Rubber bumper	2
19	M50899-03AA	Side cover	1
20	M51061-01	Motor bracket	1
21	M30865-02	Bushing	1
22	M25907	Bushing	1
23	M11271-8	Tinnerman nut	6
24	M50104-02	Bushing (wires)	1
25	M11084-26	Hex head screw #10-16 x 3/8	6
26	M15823-37	Grounding screw #8 x 14	1
27	M50902-01AB	Lower shell	1
28	M29652-04	Rubber airline	1
29	M50570-03	Transformer	1
30	M11084-26	Hex head screw #10-16 x 3/8	2
31	M29652-05	Fuel line	1
32	M50876-02	Assembly fuel filter	1
33	*	Wire assembly (red)	1
34	M50671-01	Flame out control (safety)	1
35	M51027-09	Fuel tank cap (includes gasket)	1
36	079816-01AA	Fuel tank	1
37	M51108-01	Heat-shell shield	1
38	M51017-01	Rubber Grommett	3
39	M27417	Drain Plug	1
	PARTS AVAILABLE - NOT SHOWN		
	M51295-06	Tradename decal	

*Standard hardware item, available locally.
**Not available as an assembly.

MODEL B50D

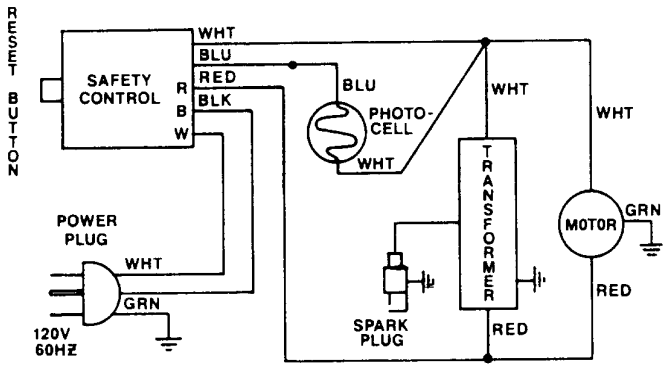

Figure 1 - Replacement Parts Illustration for Heater Model B50D

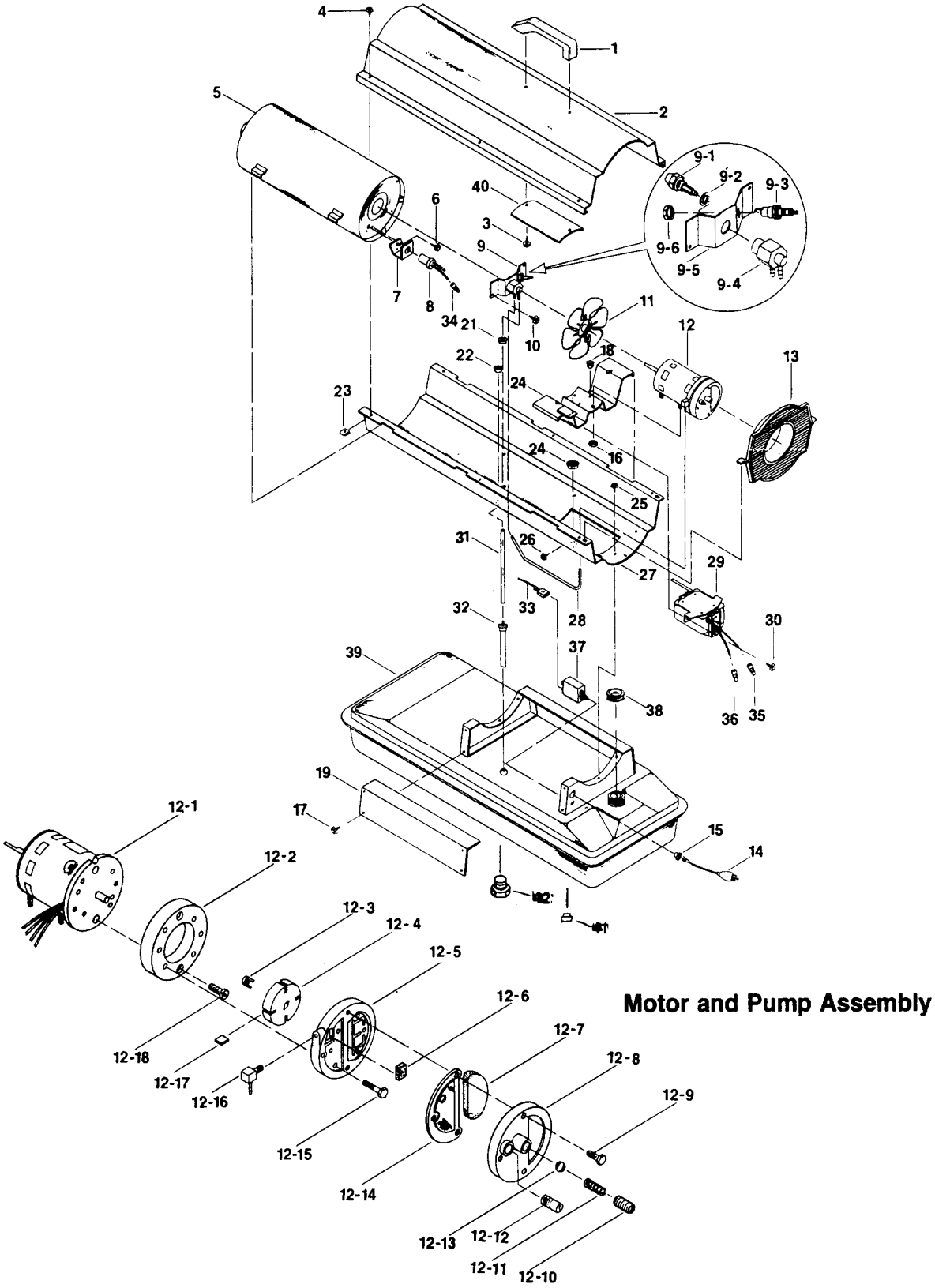

Motor and Pump Assembly